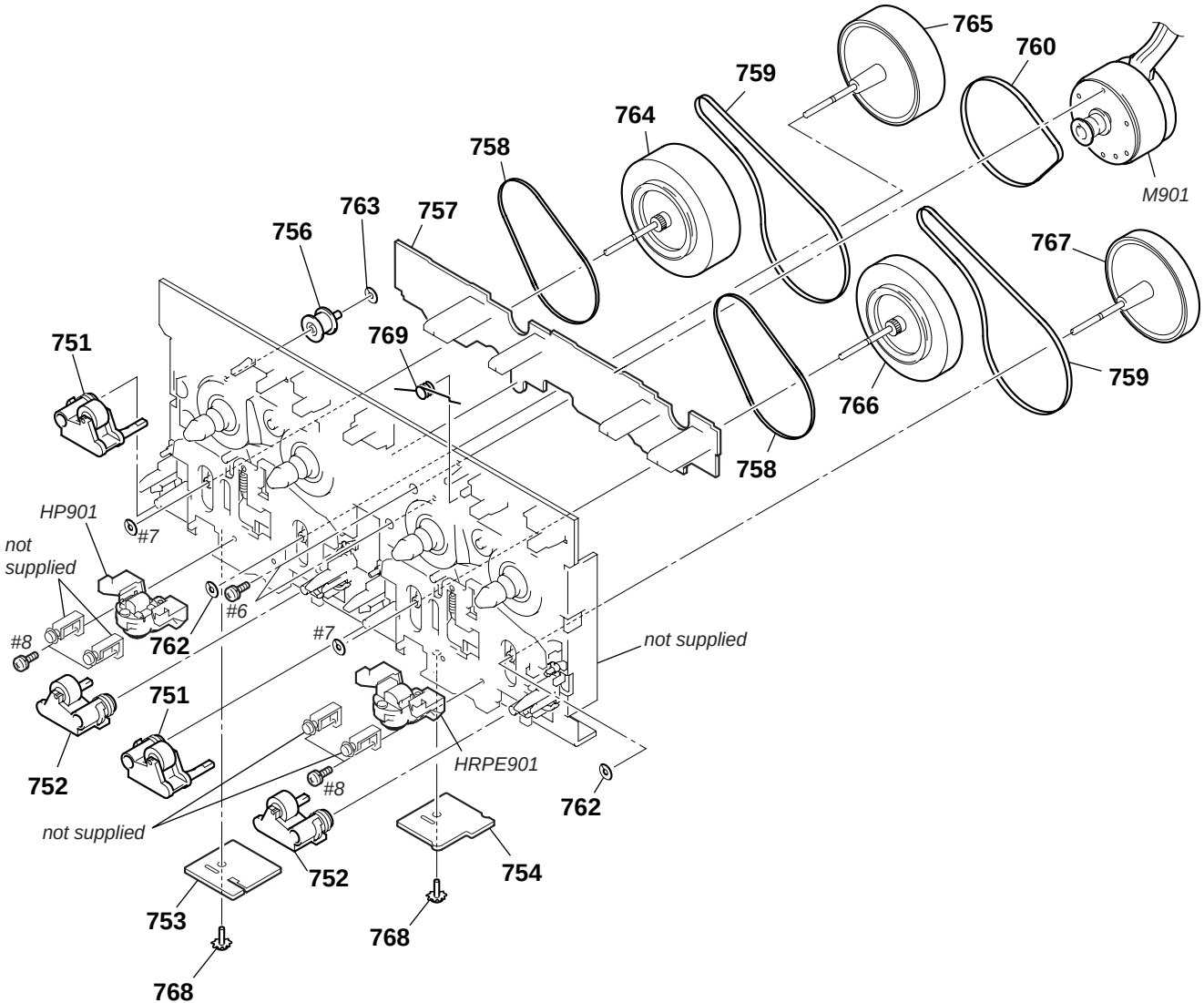
765
760
759
764
758
763
757
756
M901
767
751
769
759
766
758
HP901
#7
not
supplied
#6
#8
762
#7
not supplied
751
752
HRPE901
#8
762
not supplied
752
754
753
768
768